VIGNERON STORAGE, VS170SB-G2

Vigneron Storage *is our series designed for storing wine with a high bottle capacity. The series is available in black and stainless steel. All models are extra deep so that you can fit two bottles both in depth and height.*

Design & Function

- Designed to be placed as a freestanding unit.
- Pull-out shelves in beech wood
- Fits all types of wine bottles, including champagne and magnum
- Dimmable LED lighting with four settings
- Touch panel for adjusting temperature and lighting

40dB 177 G

Available In:

Capacity & zones

Temperature zones:

Temperature : 5–20 °C

Shelves: 8 pull-out shelves

Uv-protected glass: Yes

Active carbon filter: Yes

Performance

Energy consumption: 128 kWh/år

Power consumption: 125 W

Weight: 92kg

Energy class: F

Voltage: 220-240V

Cord length: 2m

Reversible door: Yes

Warranty: 5 years

Door lock: Yes

Dimensions

Product dimensions: H:1720 W:595 D:710mm

Packaging dimensions: H:1870 W:645 D:777mm

Accessories

ZJ11-0169- Flex box

DZ01-0062-1 - Black steel shelf front

DZ01-0062 - Stainless steel shelf front

ZJ11-0148 - Standard shelf

DZ18-0310 - Label-view shelf

ZJ11-0133 - Richard Juhlin Champagne shelf

ZJ11-0157 - Display shelf

ZJ11-0158 - Wine glass rack

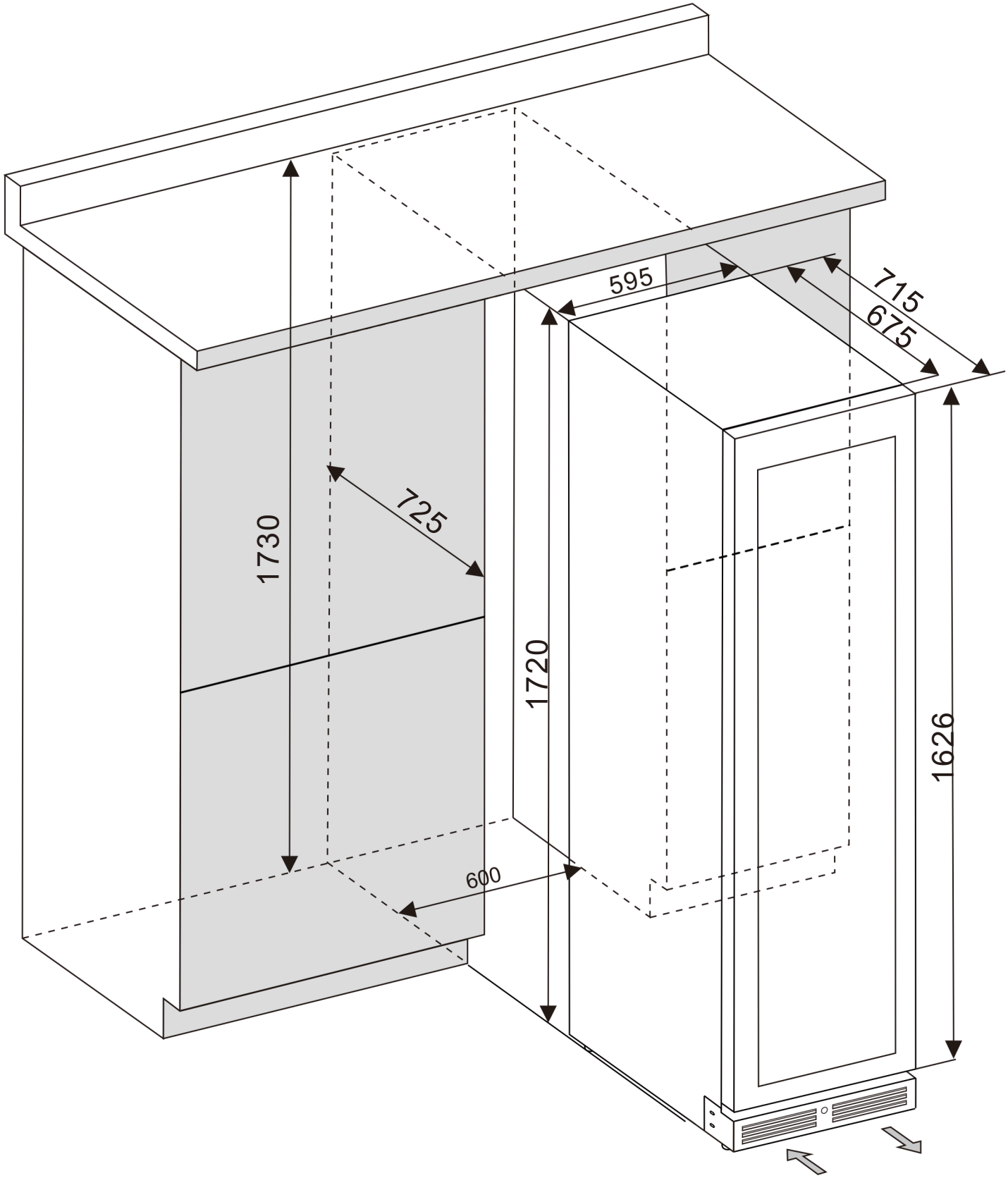
595
715
675
1730
725
1720
1626
600

Front View

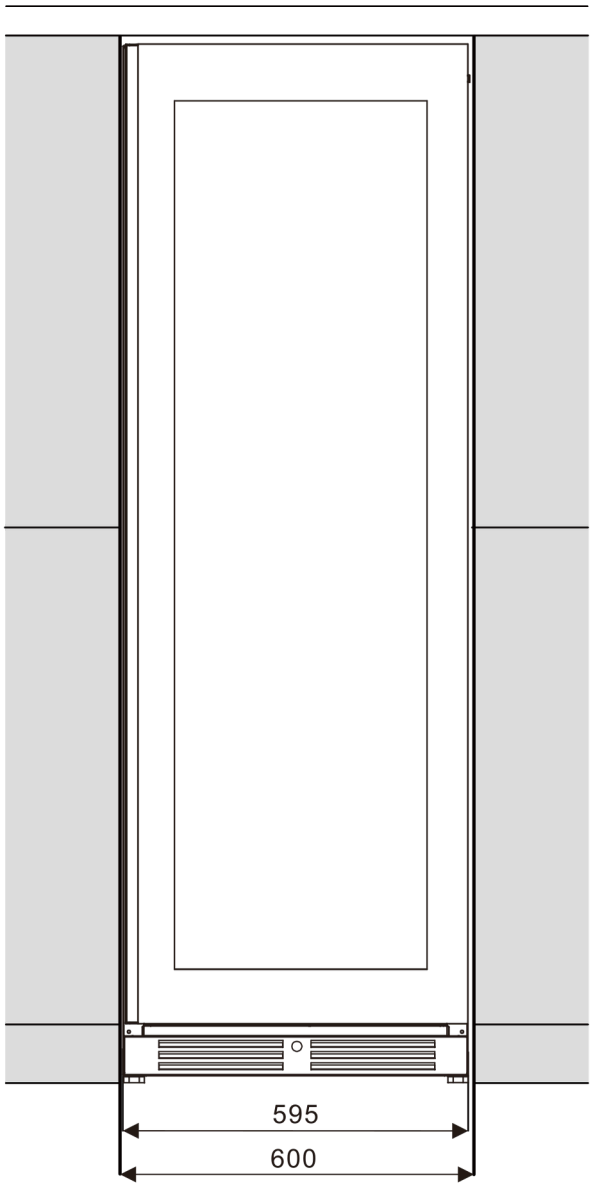

Side View

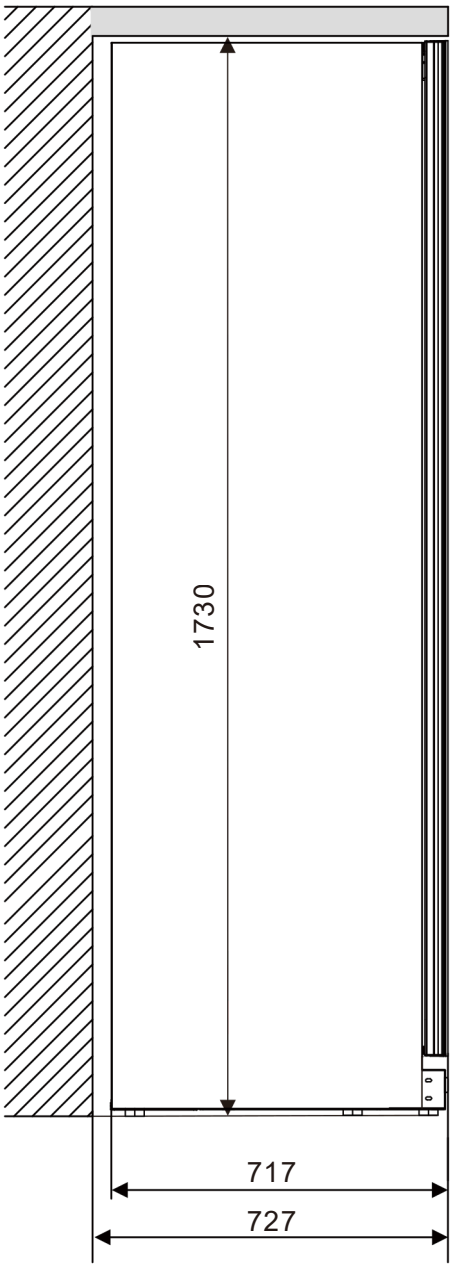

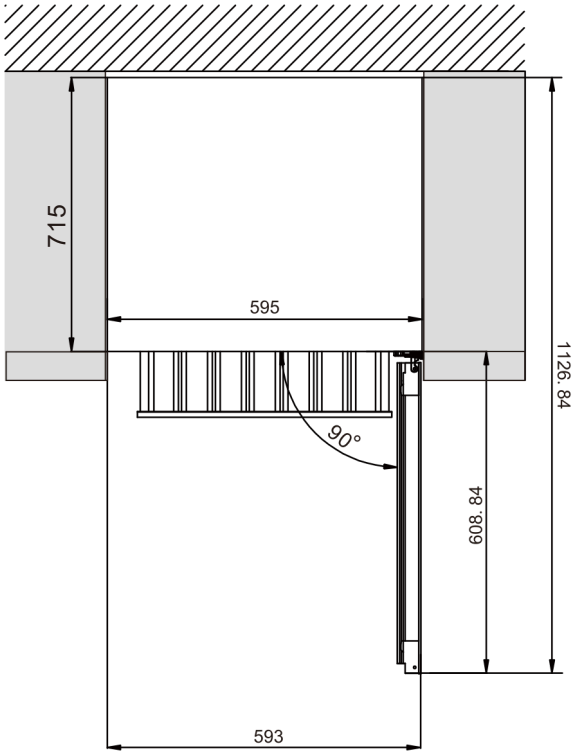
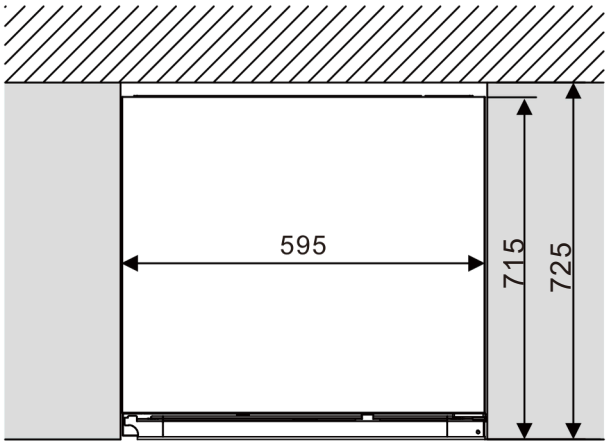
Top View